GRODAN, A., MUDr.

Notes on unusual complications of head injuries. Cesk. neur. 21 no.6: 404-408 Nov 58.

1. Z chir. klin. LFUK v Kosiciach, prednosta prof. MUDr. J. Knazovicky.
(HEAD, wds. & inj.
unusual coml. (Cz))

GRODAN, A., asist. chir. klin. KU v Kosiciach

Epidermoid of the spinal cord. Rozhl. chir. 38 no.11:774-781 Nov 59.

1. Neurochir. odd. Ustr voj. nem. v Praho, prednosta doc MUDr. Zd. Kunc.

(CARCINOMA EPIDERMOID, surg.)
(SPINAL CORD, neopl.)

EXCERPTA MEDICA Sec 8 Vol 12/11 Neurology Nov 59

5613. LATE SEQUELAE OF CLOSED CEREBROCRANIAL INJURIES AFFECTING THE VISUAL SYSTEM - Neskoré následky zatvorených mozgovolebečných úrazov na zrakový systém - Grodan A. and Šimig I. Chir. Klin. Lek. Fak. Univ. Komenského, Košice.; Očnej Klin. Lek. Fak. Univ. Komenského, Košice. - BRATISL. LEK. LISTY 1959, 39(I)/2 (65-77) Graphs 5 Tables 3

The condition of the optic analysor apparatus was examined in 478 patients with closed cerebrocranial injuries. The field of vision was pathological in 35.56% of 814 cases examined some considerable time after the accident. Colour perimetric findings were pathological in 37.4% of 482 cases tested. Klaus - Olomouc (VIII, 12)

GRODAN, A.; LUKAN, I.

Late auditory and vestibular disorders following closed cerebro-cranial injuries. Vop.neirokhir. 24 no.4:24-28 Je-Ag '60. (MIRA 13:12)

(BRAIN—WOUNDS AND INJURIES)
(VESTIBULAR APPARATUS) (DEAFNESS)

KUNSTADT, E.; GRODAN, A.

Recent trends in the treatment of malignant cerebral tumors by the intra-cavitary application of cobalt pearls. Cesk. rentgenol. 16 no.2: 86-91 Ap '62.

1. Radiologicka klinika Lekarskej fakulty University P. J. Safarika v Kosiciach, prednosta doc. MUDr. E. Kunstadt Chirurgicka klinika Lekarskej fakulty University P. J. Safarika v Kosiciach, prednosta prof MUDr. J. Knazovicky.

(BRAIN NEOPLASMS radiother)
(COBALT radioactive)

CZECHOSLOVAKIA

A. [illegible], J. [illegible], Surgical Clinic and Neuropsychiatric Clinic of Medical Faculty of P.J. Safaryk University (Chirurgische Klinik a psychiatrische Klinik Lekarske fakulty UPJS [Universita P. J. Safaryka] Kosice.

"Psychic Disturbances Following Closed Craniocerebral Trauma."

Prague, Ceskoslovenska Psychiatrie, Vol 59, No 1, Jan 63; pp 1-[illegible].

Abstract [English summary modified]: Statistical data and details on [illegible] patients with various types of accidental injuries, 322 of them had various psychic disturbances, most frequent being memory lapses (27%) and sleepiness -- obnubilation (37%). Data from [illegible] returned questionnaires are also tabulated, listing mental-emotional complaints with accidents. In most, intellectual functions and memory were affected to various degrees depending on age, location and severity of injury and other factors. Five diagrams, 5 Soviet, 4 Czech, 1 Hungarian and 17 Western references.

1/1

GRODAN, A.

On the problem of vascular abnormalities in the area of the vena cerebra magni (galeni). Bratisl. lek. listy 43 Pt. 2 no.8:480-486 '63.

1. Chirurgicka klinika Lek. fak. Univerzity P.J. Safarika v Kosiciach, veduci prof. MUDr. J. Knazovicky.
(CEREBROVASCULAR DISORDERS) (ABNORMALITIES)
(DIAGNOSIS, DIFFERENTIAL) (FISTULA, ARTERIOVENOUS)

Immunology

POLAND

GRODECKA, B., and SCHILLER, B., of the "Biomed" Central Serum and Vaccine Laboratory (Centralne Laboratorium Surowic i Szczepionek "Biomed"), Warsaw. Prof. Dr. K. Zakrzewski, Head.

"Determination of the O Antigen in Typhoid Vaccines by Means of the Metachromatic Reaction"

Warsaw, Medycyna Doswiadczalna i Mikrobiologia, Vol 23, No 3, 1966, pp 237-245.

Abstract (Authors' English summary modified): A spectrophotometric method is described for quantitative determination of O antigen in typhoid vaccines. It is based on the metachromatic properties of the antigen, which forms a metachromatic complex with toluidine blue in high ionic strength solutions. Optical density is measured in metachromatic maximum absorption band and in the peak of the free dye. The ratio of the two densities is plotted against the O antigen concentration, and the amount of antigen that binds the dye completely is determined. The method was used for determining the O antigen contents in 4 typhoid vaccines employed in field trials, and the results compared with those of serological determination. Contains 3 Tables, 2 Figures and [illegible] (6 Polish, 8 Western and 1 German-language).

GRODECKA, Jadwiga

Studies on reactions of children with tuberculosis related to their admission into a sanatorium. Pediat.polska 35 no.9:1137-1146 S '60.

1. Z Dzialu Metodyczno-Organizacyjnego Instytutu Gruzlicy Dyrektor Instytutu: prof. dr med. W.Jaroszewicz
(TUBERCULOSIS in inf & child)
(CHILD PSYCHOLOGY)

GRODECKA, Jadwiga

Current knowledge on tuberculosis in subjects from different social strata (according to a survey made in 1958). Gruzlica 29 no.9:797-804 S '61.

1. Z Działu Metodyczno-Organizacyjnego Instytutu Gruźlicy Kierownik: doc. dr med. O. Buraczewski Dyrektor Instytutu Gruźlicy: prof. dr med. W. Jaroszewicz.

(TUBERCULOSIS sociol)

GRODECKA, Urszula; OGINSKA, Maria

Anti-Rh (c) antibodies as a result of blood transfusion and hetero-group pregnancy. Arch. immun. ter. dosw. 4:10-18 1956.

1. II Klinika Poloznictwa i Chorob Kobiecych Akademii Medycznej we Wroclawiu (Kierownik: prof. dr K. Jablonski) Instytut Immunologii i Terapii Doswiadczalnej PAN we Wroclawiu (Dyrektor: prof. dr St. Slopek) Dzial Immunologii (Osrodek Badan Patologii Ciazy) Kierownik: prof. dr H. Kowarzyk)

(RH FACTORS
isoimmun. in pregn. & blood transfusion, rare cases)

EXCERPTA MEDICA Sec 4 Vol 12/7 Med. Micro. July 59

2219. EXPERIMENTAL ERYTHROBLASTOSIS IN RABBITS. I. THE ANTIGENIC STRUCTURE OF RABBIT BLOOD - Doświadczalna erytroblastoza u królików. I. Struktura antygenowa krwi królików - Grodecka U. and Osińska M. Inst. Immunol. i Terap. Dośw. PAN, Wrocław - ARCH. IMMUNOL. TERAP. DOSW. (Wrocław) 1957, 5 (373-385) Tables 10

In order to obtain an experimental model for the haemolytic disease due to the incompatibility of blood groups in mother and child, the authors performed serological studies on rabbits. The serum used for the experiments was that of 5 rabbits which had previously been given the serum of a female rabbit giving birth to dead foetuses and with symptoms of erythroblastosis. Using in turn the serum of these 5 rabbits in the blood examinations of 69 rabbits, the authors found that the above-mentioned sera contained several antibodies directed against one or several antigenic principles. These results will permit the selection of animals, necessary for the proper mating of rabbits to produce experimental erythroblastosis.

Kawecki - Wrocław (V. 4)

GRODECKA, Urszula; OSINSKA, Maria

Blood groups in animals and their significance in pathogenesis of hemolytic disease. Postepy. hig. med. dosw. 11 no.4:387-396 1957.

1. Instytut Immunologii i Terapii Doswiadczalnej PAN im. Ludwika Hirszfelda Dzial Immunologii. Wroclaw, ul Chalubinskiego 4.

(ANEMIA, HEMOLYTIC, etiology and pathogenesis,
blood group incompatibility in animals, review (Pol))
(BLOOD GROUPS,
incompatibility in hemolytic dis. in animals, review (Pol))

GRODECKA, Urszula; MARCINIAKOWNA, Ewa; OSINSKA, Maria

Significance of serological formulae in pregnancies with serological conflicts. Arch.immun.ter.dosw. 8 no.2:225-234 '60.

1. Osrodek Badan Patologii Ciazy Instytutu Immunologii i Terapii Doswiadczalnej PAN we Wroclawiu
(BLOOD GROUPS)
(PREGNANCY blood)

GRODECKA, Urszula; HALAZINSKA, Lucja

Hemolytic disease of newborn caused by anti-c antibodies. Polski tygod.lek. 15 no.14:512-513 4 Ap '60.

1. Z Osrodka Badan Patologii Ciazy; kierownik: prof. dr H. Kowarczyk, Instytutu Immunologii i Terapii Doswiadchalnej PAN we Wroclawiu; dyrektor: prof.dr St. Slopek i z II Kliniki Poloznictwa i Chorob Kobiecych; kierownik: prof. dr K.Jablonski.
(ERYTHROBLASTOSIS FETAL)

GRODECKA, Urszula

On the hazard of hemolytic disease in offspring born to couples with Rh incompatitility. Polski tygod.lek.15 no.30:1137-1140 25 Jl '60.

1. Z Ośrodka Badan Patologii Ciazy; kierownik: prof. dr H.Kowarzyk; Instytut Immunologii i Terapii Doswiadczalnej PAN we Wroclawiu; dyrektor: prof. dr St.Slopek
(ERYTHROBLASTOSIS FETAL etiol)

Sodorka, Podgula.

2 3

[illegible] Given Names

Country: Poland

Academic Degrees: [Not given]

Affiliation: Institute of Immunology and Experimental Therapy of the Polish Academy of Sciences (Instytut Immunologii i Terapii Doświadczalnej PAN), Wroclaw

Source: Warsaw, Przegląd Lekarski, No 5, 1961, pp 198-199.

Data: "Significance of Some Serological Structures in Conflict Pregnancy." (Abstract)

Co-author:

OSTWSKI, M. Institute of Immunology and Experimental Therapy of the Polish Academy of Sciences, Wroclaw

GODZINSKA, Henryka; GRODECKA, Urszula

Sedimentation of erythrocytes from the umbilical blood and its role in the diagnosis of hemolytic disease of newborn infants. Arch.immun. ter.dosw. 9 no.1:83-89 '61.

1. Zaklad Grup Krwi Instytutu Immunologii i Terapii Doswiadczalnej PAN we Wroclawiu.
(ERYTHROBLASTOSIS FETAL diag) (BLOOD SEDIMENTATION)

GRODECKA, Urszula

Antigenic character of rabbit immune antibodies. Arch. immun. ter. dosw. 9 no.4:779-800 '61.

1. Department of Blood Groups, Institute of Immunology and Experimental Therapy, Polish Academy of Sciences, Wroclaw.

(IMMUNE SERUMS) (ANTIBODIES) (ANTIGENS)

GRODECKA, U.

SURNAME, Given Names

2

Country: Poland

Academic Degrees: [not given]

Affiliation: [Presumed] Ludwik Hirszfeld Institute of Immunology and Exp mental Therapy (Instytut Immunologii i Terapii Doswiadczaln Ludwika Hirszfelda), Polish Academy of Sciences (PAN--Polsk Akademia Nauk), Wroclaw; Director: Prof. Stefan SLOPEK, Dr.

Source: Warsaw, Postepy Higieny i Medycyny Doswiadczalnej, Vol XV, No 1961, pp 371-372.

Data: "The Risk of Hemolytic Disease in Offspring of Marriages with Incompatibility in Respect to Rh Characteristics."

English abstract of article originally published in Pol Tyg Le 1960, 15, 1137.

SURNAME, Given Names

Country: Poland

Academic Degrees: [not given]

Affiliation: [Presumed] Ludwik Hirszfeld Institute of Immunology and Experimental Therapy (Instytut Immunologii i Terapii Doswiadczalnej im Ludwika Hirszfelda), Polish Academy of Sciences (PAN--Polska Akademia Nauk), Wroclaw; Director: Prof. Stefan SLOPEK, Dr.

~~Source:~~

Source: Warsaw, Postepy Higieny i Medycyny Doswiadczalnej, Vol XV, No 4, 1961, pp 372-374.

~~Date:~~

Data: "The Significance of Serologic Structure in Conflict Pregnancy." English abstract of original article, published in Arch Immunol i Terapii Dosw, 1960, 8, 225.

Authors:
GRODECKA, U.
MARCINIAKOWNA, E.
OSINSKA, M.

SURNAME, Given Names

4

Country: Poland

Academic Degrees: [not given]

Affiliation: [Presumed] Ludwik Hirszfeld Institute of Immunology and Experimental Therapy (Instytut Immunologii i Terapii Doswiadczalnej im. Ludwika Hirszfelda), Polish Academy of Sciences (PAN--Pol Akademia Nauk), Wroclaw; Director: Prof. Stefan SLOPEK, Dr.

~~Source:~~ Source: Warsaw, Postepy Higieny i Medycyny Doswiadczalnej, Vol XV, No 4, ~~Date:~~ 1961, pp 377-378.

Data: "Hemolytic Disease of the Newborn Caused by Anti-C Antibodies."

English abstract of article originally published in Pol Tyg Lek, 1960, 15, 512.

Authors:
GRODECKA, U.
HALAZINSKA, L.

SOV 90164)

[illegible]

Urszula [illegible], Institute of [illegible] and Experimental [illegible]; Head [illegible], MD, and Department of Blood [illegible], Polish Academy of Sciences [illegible]

"Serologic Differentiation of Rabbit [illegible]"

Krakow, Folia Biologica, Vol [illegible], No 3-4, 1962; pp 177-[illegible].

Abstract [English article]: Serologic studies [illegible] The presence [illegible] character [illegible] rabbit [illegible] [illegible] were [illegible] [illegible].

1/1

GRODECKA, Urszula

Serologic differentiation of rabbit gamma globulins. Folia biol 10 no.3/4:179-185 '62.

1. Institute of Immunology and Experimental Therapy, Polish Academy of Sciences, Wroclaw. Head: S. Slopek, M.D. and Department of Blood Groups, Polish Academy of Sciences, Wroclaw. Head: B.Popielski, M.D.

GRODECKA, Urszula

Production of iso-precipitating rabbit antibodies. Postepy hig. med.dosw. 17 no.5:567-569 S-O'63

1. Z Zakladu Grup Krwi Instytutu Immunologii i Terapii Doswiadczalnej PAN im. L.Hirszfelda we Wroclawiu; kierownik Zakladu: prof.dr. B.Popielski; dyrektor instytutu: prof.dr.S.Slopek.

GRODECKA, Urszula

Hereditary transmission of rabbit γ-globulin allotypes. Arch. immun. ther. exp. 12 no.2:143-149 '64.

1. Department of Blood Groups, Institute of Immunology and Experimental Therapy, Polish Academy of Sciences, Wroclaw.

GRODECKA, Grazyna

Serologic differentiation of human serum globulins. Preliminary communication. Arch. immun. ther. exp. 12 no.2 [illegible] '64

1. Department of Blood Groups, Institute of Immunology and Experimental Therapy, Polish Academy of Sciences, Wrocław.

GRODECKI, J.

"Organization of Repair Against the Background of the Development of Automobile Production and Transportation." p. 278 (Motoryzacja, Vol. 8, No. 10, Oct. 1953, Warszawa)

SO: Monthly List of East European Accessions, Vol. 3, No. 6, Library of Congress, June, 1954, Uncl.

KOLASKI, J.

"Repairing Trucks in Our Own Transportation Service Workshops." p. 303, (MOTORYZACJA, Vol. 8, No. 11, Nov. 1953. Warszawa, Poland.)

SO: Monthly List of East European Accessions, (EEAL), LC, Vol. 3, No. 12, Dec. 1954, Uncl.

GRADECKI, J.

"Regenerating Repairs." p. 44, (MOTORYZACJA, Vol. 9, No. 2, Feb. 1954. Warszawa, Poland.)

SO: Monthly List of East European Accessions, (EEAL), LC, Vol. 3, No. 12, Dec. 1954, Uncl.

GRODECKI, J.

"More about the organization of repairs in automotive transportation." p.327. (MOTORYZACJA. Vol. 9, No. 11, Nov. 1954. Warszawa, Poland)

SO: Monthly List of East European Accessions. (EEAL). LC. Vol. 4, No. 4. April 1955. Uncl.

GRODECKI, J.

Remarks on the matter of a supply base for repair works of the automobile industry. p. 97, Vol.

Vol. 5, No. 4, April 1955, TECHNIKA MOTORYZACYJNA

SO:MONTHLY LIST OF EAST EUROPEAN ACCESSIONS, (EEAL), LC, Vol. 4, No. 9, Sept. 1955, Uncl.

GRODICKI, J.

Geneva Automobile Show. 1957, p. 132
(MOTORYZACJA, Vol. 12, No. 5, May, 1957, Warsaw, Poland)

SO: Monthly List of East European Accessions (EEAL) LC, Vol. 6, No. 9, Sept. 1957, Uncl.

ZBOJECKI, J.

Passenger automobiles in the light of the development of motorization in the Soviet Union in 1959-1965. p. 10.

PRZEGLAD TECHNICZNY. (Naczelna Organizacja Techniczna) Warszawa, Poland. Vol. 90, no. 24, June 1959.

Monthly List of East European Accessions (EEAI), LC, Vol. 8, no. 8, Aug. 1959.

Uncl.

GRODECKI, Jerzy, mgr. inz.

Developments trends of Polish motorization. Przegl techn no.39:4-5 28 S '60

GRODECKI, Jerzy, mgr., inz.

The International Automobile Fair in Geneva in 1962. Inzynl techn no. 27:6-7. 8 Jl '62.

GRODECKI, Jerzy, mgr inz.

New starts of operation in production processes and technological progress in the national economy. Przegl techn no.51:3,4 23 D '62.

GRODECKI, Jerzy, mgr inz.

Development problems in the motor vehicle industry. Techn motor 13 no. 7: 216-220 Jl '63.

GRODECKI, Jerzy, mgr inz.

New production technology in the machine construction industry.
Przegl tech 84 no.22:3,4 2 Je '63.

GRODECKI, Jerzy, mgr inz.

At the Paris automobile car exhibition. Przegl techn 84 no.1:7 6 Ja '63.

GRODECKI, Jerzy, mgr inz.

Development trends in the world automobile industry as seen in the Automobile Salon in Turin. Przegl techn 84 no.50:7 15 D '63.

GRODECKI, Jerzy, mgr inz.

Trucks and specialized automobiles at the International Automobile Salon in Turin. Przegl techn 85 no.5: 7 2 F'64.

GROBECKI, Jerzy, mgr inz.

Development of the motor industry during the years 1966-1970.
Przegl techn 85 no. 24:5 14 Je '64.

GRODECKI, Jerzy, mgr inz.

Problems of spare parts in [illegible] maintenance. Przegl tecz 36 no.9:1,4 28 F '65.

GRODECKI, Ryszard, inz.

Work done for the security and safety of traffic and communication during the electrification of the line Wroclaw—Opole—Strzelce Opolskie. Przegl kolej elektrotech 13 no.1:2-5 Ja '61.

GRODECKI, R., ins.

Operation and telecommunication protection services of the Wroclaw District Administration of State Railroads in its winter activities 1962/63. Przegl kolej elektrotech 15 no.5:119-121 My '63.

GRODECKI, Ryszard, inz.

Computers in railroad transportation. Przegl kolej elektrotech 15 no.7:205 Jl '63.

1. Dyrekcja Okregowa Kolei Panstwowych, Wroclaw.

GRODEK, A., inzh.

[redacted]

Newly designed clamp for pretensioning reinforcement in forms. Gor.i sel.stroi. no.8/9:26 Ag-S '57. (MIRA 10:12)
(Prestressed concrete)

GRODSKIY, Ye.; GRODEK, A., nauchnyy sotrudnik; TITOV, S., nauchnyy sotrudnik

Studies of mesh-reinforced concrete. Sbor. nauch. soob. NIIsel'stroia no.2:14-30 '60. (MIRA 15:5)

1. Nauchno-issledovatel'skiy institut sel'skogo stroitel'stva.
2. Rukovoditel' laboratorii armotsementa Nauchno-issledovatel'skogo instituta sel'skogo stroitel'stva (for Grodskiy).
(Reinforced concrete construction)

BEKIRBAYEV, D.B.; GRODEL', G.S.; GUL'SHIN, P.A.; KLEPIKOVA, M.S.; PETRUKHIN, P.M.; POLYANSKIY, I.P.; RASSOLOV, N.I.; TARASOVA, A.A.; FERTEL'MEYSTER, Ya.N.; CHERVINSKIY, M.S.; SHANOVSKAYA, S.S.; KLIMANOV, A.D., otv.red.; ZHUKOV, V.V., red.izd-va; PROZOROVSKAYA, V.L., tekhn.red.; KONDRAT'YEVA, M.A., tekhn.red.

[Control of coal and rock dust in mines] Bor'ba s ugol'noi i porodnoi pyl'iu v shakhtakh. Moskva, Gos.nauchno-tekhn.izd-vo lit-ry po gornomu delu, 1959. 499 p. (MIRA 13:3)
(Mine dusts)

GRODEL', G.S., insh.

New method of watering used in mining with breaking hammers. Bezop.truda v prom. 3 no.4:26-27 Ap '59. (MIRA 12:6)

1. Makeyevskiy nauchno-issledovatel'skiy institut po bezopasnosti rabot v gornoy promyshlennosti.
(Mining engineering--Safety measures)

GRODEL', G.S.

Breaking and water-spraying hammers used in edge seams.
Biul.tekh.-ekon.inform. no.8:4-5 '59. (MIRA 13:1)
(Coal mining machinery)

BEKIRBAYEV, D.B.; GRODEL', G.S.; GUL'SHIN, P.A.; KLEPIKOVA, M.S.; PETRUKHIN, P.M.; POLYANSKIY, I.P.; RASSOLOV, N.I.; TARASOVA, A.A.; FERTEL'-MEYSTER, Ya.N.; CHERVINSKIY, M.S.; SHAMOVSKAYA, S.S.; KLIMANOV, A.D., otv.red.; ZHUKOV, V.V., red.izd-va; PROZOROVSKAYA, V.L., tekhn.red.; KONDRAT'YEVA, M.A., tekhn.red.

[Coal and rock dust control in mines] Bor'ba s ugol'noi i porodnoi pyl'iu v shakhtakh. Moskva, Gos.nauchno-tekhn.izd-vo lit-ry po gornomu delu, 1959. 499 p. (MIRA 13:6)
(Mine dusts) (Coal mines and mining--Safety measures)

GRODEL', G.S., inzh.

Adding wetting agents to water conduits. Bezop.truda v prom. 5 no.7:15-16 Jl '61. (MIRA 14:6)

1. Makeyevskiy nauchno-issledovatel'skiy institut po bezopasnosti rabot v gornoy promyshlennosti.
(Coal mines and mining--Safety measures)

VERNOV, Grigoriy Petrovich; GRODEL', Georgiy Semenovich; RASSOLOV, Nikolay Ivanovich; SHADKHAN, V.M., otv. red.; SMIRENSKIY, M.M., red.izd-va; LOMILINA, L.N., tekhn. red.

[Means of controlling mine dusts]Sredstva bor'by s pyl'iu v shakhtakh. Moskva, Gosgortekhizdat, 1962. 69 p. (MIRA 15:11)

(Mine dusts)

SHANOVSKAYA, S.S.; RASSOLOV, N.I.; BEKIRBAYEV, B.D.[deceased]; PETRUKHIN, P.M.; GRODEL, G.S.; FROLOV, M.A.; CHERVINSKIY, M.S.; BOBRITSKIY, V.P.; POLYANSKIY, I.P.; NIKITIN, V.S., otv. red.; LUCHKO, V.S., red.izd-va; SHKLYAR, S.Ya., tekhn. red.; MAKSIMOVA, V.V., tekhn. red.

[Handbook on controlling dust in coal mines]Spravochnoe posobie po bor'be s pyl'iu v ugol'nykh shakhtakh. [By S.S. Shanovskoi i dr.] Moskva, Gosgortekhizdat, 1963. 190 p. (MIRA 16:6)

(Mine dusts)

GRODEL', G.S.

Ways of getting wetting agents into waterlines used for wetting. Vop. bezop. v ugol'. shakh. 13:211-218 '62. (MIRA 16:5)

(Water pipes)

GRODEL', G.S.

Jets for wetting in coal mines. Vop. bezop. v ugol'. shakh. 13: 205-210 '62. (MIRA 16:5)

(Jets) (Mine dusts—Prevention)

GROPEL', G.S.

Determining the water permeability of coal seams. Trudy MakNII 15: 178-184 '64.

Moisture content of coal mined using complex dust suppression during mining operations. Ibid.:185-190

(MIRA 17:11)

L 13421-66 EWP(j)/T RPL WW/RM

ACC NR: AP6006880 SOURCE CODE: PO/0046/65/010/008/0469/0476

AUTHOR: Polyatski, Zenon--Polacki, Z.; Grodel', Mar'yan--Grodel, M.

ORG: Polytechnical Institute, Gdansk (Politekhnickeskiy institut)

TITLE: Radioluminescence of styrenemethylmethacrylate copolymers

SOURCE: Nukleonika, v. 10, no. 8, 1965, 469-476

TOPIC TAGS: radioluminescence, copolymer, styrene, methylmethacrylate, light emission

ABSTRACT: The concentration dependence of the radioluminescence efficiency of solutions of styrene in methylmethacrylate were studied before and after polymerization. Conclusions were drawn indirectly from the measurements of the relative light emission intensity of 2-(1-naphthyl)-5-phenyloxazole, which was added to the solutions as an admixture with unchanged concentration. With dilution of styrene by methylmethacrylate the radioluminescence intensity decreased, thus methylmethacrylate can be considered as absorbing substance causing the quenching of radioluminescence. It was established that the radioluminescence efficiency of solutions of 80% styrene and 20% methylemthacrylate was equal to that of polystyrene solutions. The authors thank Professor V. Mostsitskiy for the valuable advice and interest in this work. Further thanks is extended to I. Kachinskiy for his active assistance in the preparation of the solid solutions. Orig. art. has: 6 figures. [NA]

SUB CODE: 07, 20 / SUBM DATE: 13Jul64 / ORIG REF: 004 / OTH REF: 012
SOV REF: 003

Card 1/1

GRODNENSKIY, A., inzh.

Instead of formwork, a protective casing. Na stroi.Ros. 4 no.6:5 Je '63. (MIRA 16:6)

(Concrete construction)

VOYUTSKIY, V.S.; GRUZDEVKIY, A.G.

Interference-stability of an asymchronous storage. Izvest. geofiz. no.40:52-56 '64 (MIRA 18:1)

GRODENSKIY, G., otvetstvennyy redaktor; SOSEDKO, A., redaktor-opganizator; LEYTINA, T., tekhnicheskiy redaktor

[Globus; a geographical annual for children] Globus; geograficheskii ezhegodnik dlia detei, 1949. Moskva, Gos. izd-vo detskoi lit-ry Ministerstva prosveshcheniia RSFSR, 1949. 431 p. (MLRA 9:7)

1. Geograficheskoye obshchestvo SSSR.
(Geography--Yearbooks)

GRODENSKIY, G.P., otvetstvennyy redaktor; KORENYUK, Z.P., tekhnicheskiy redaktor

[Through our native land; collected articles on geography for children] Po rodnoi strane; geograficheskii sbornik dlia detei. Leningrad, Gos. izd-vo detskoi lit-ry Ministerstva prosveshchenii RSFSR, 1954. 200 p. (MLRA 7:10)
(Russia--Description and travel)

SMIRNOV, Vsevolod Aleksandrovich; GRODENSKIY, G.P., redaktor; KORENYUK, Z.P., tekhnicheskiy redaktor; NIKUNOVA, V.I., tekhnicheskiy redaktor.

[Experiments and homemade equipment in physics] Opyty i samodelki po fizike. Leningrad, Gos.izd-vo detskoi lit-ry, 1955. 110 p.
(Physics—Experiments) (Physical instruments) (MLRA 8:5)

GRODENSKIY G.P.

KORSUNSKAYA, Vera Mikhaylovna; GRODENSKIY, G.P., otvetstvennyy redaktor; SUSLENNIKOVA, N.M., tekhnicheskiy redaktor

[Charles Darwin, the great naturalist] Velikii naturalist Charlz Darvin. Khudoshnik B.Piatunin. Leningrad, Gos. izd-vo detskoi lit-ry, 1956. 319 p. (MLRA 10:2)
(Darwin, Charles, 1809-1882)

GRODENSKIY, Grigoriy Pavlovich; KORSUNSKAYA, V.M., red.; FIALKINA, G.A., red.; TARASOVA, V.V., tekhn.red.

[Readings in biology outside class] Vneklassnoe chtenie po biologii. Pod red. V.M.Korsunskoi. Moskva, Izd-vo Akademii pedagog. nauk RSFSR, 1957. 49 p. (MIRA 11:4)
(Biology--Study and teaching)

TIKHONOV-BUGROV, Yevgeniy Dmitriyevich; GRODENSKIY, G.P., otvetstvennyy redaktor; KORENYUK, Z.P., tekhnicheskiy redaktor.

[Harnessing of rivers]. Pokorenie rek. Leningrad, Gos.izd-vo detskoi lit-ry, 1957. 153 p.
(Hydroelectric power stations)

KHRSHANOVSKIY, A.A., otv.red.; AL'TMAN, L.P., red.; VERZILIN, N.M., red.; GRODENSKIY, G.P., red.; OBRUCHEV, S.V., red.; SUSLENNIKOVA, N.M., tekhn.red.; LEONT'YEVA, L.B., tekhn.red.

[Globus; a geographical yearbook for children, 1957] Globus; geograficheskii ezhegodnik dlia detei, 1957. Leningrad, Gos. izd-vo detskoi lit-ry M-va prosv.RSFSR, 1957. 438 p. (MIRA 12:8)

(Geography--Juvenile literature)

GRODENSKIY, Grigoriy Pavlovich; NEUYMINA, N.K., otv.red.; SUSLENNIKOVA, N.M., tekhn. red.

[Ural treasure; through the Il'men Preserve]Ural'skaia kladovaia; po Il'menskomu zapovedniku. 2., dop. izd. Leningrad, Detgiz, 1962. 123 p. (MIRA 15:11)
(Il'men Mountains—Minerals)

DZHALALBEKOVA, L.A.; VERZILIN, I.M., prof.,red.; ZUBKOV,A.I.,red.; KALESNIK, S.V., prof., red.; NEVSKIY, S.V., red.; OBRUCHEV,S.V., prof.,red.; RODIN, L.Ye.,doktor biol.nauk, red.;USPENSKIY, L.V., pis., red.; SHCHERBAKOV, D.I., akademik, red.; GRODENSKIY, G.P., otv. red.; LEONT'YEVA, L.B., tekhn. red.; TRUSOVA, P.L., tekhn. red.

[The globe; geographical yearbook for children] Globus; geograficheskii ezhegodnik dlia detei. Detgiz, Leningrad, 1962. 428 p. 4 maps. (MIRA 16:5)

1. Chlen-korrespondent Akademii pedagogicheskikh nauk (for Verzilin). 2. Chlen-korrespondent Akademii nauk SSSR (for Kalesnik, Obruchev).

(Geography--Yearbooks)

VLASOV, Aleksandr Yefimovich; MLODIK, Arkadiy Markovich; GRODENSKIY, G.P., otv. red.; TRUSOVA, P.L., tekhn. red.

[Magic window] Volshebnoe okno. Leningrad, Detgiz, 1963. 158 p. (MIRA 16:5)

(Motion-picture photography)

BATUYEV, Andrey Mikhaylovich; GRODENSKIY, G.F., otv. red.

[Martik and other animals] Martik i drugie. Leningrad, Detskaia literatura, 1965. 86 p. (MIRA 18:7)

L 00118-65 EWT(d)/TDB(jj)/BXT/EED-2/EWP(1) Po-4/Pq-4/Pg-4/Pk-4 IJP(c)
BB/TK/GG/GS/JXT(bf)

ACCESSION NR: AT5003806 S/0000/64/000/000/0074/0085

56
55
B+1

AUTHOR: Grodetskaya, T. D.

TITLE: Reference equipment of the Central Branch Reference-Information Center

SOURCE: Moscow. Vsesoyuznyy institut nauchnoy i tekhnicheskoy informatsii. Sozdaniye i ispol'zovaniye tsentral'nogo otraslevogo spravochno-informatsionnogo fonda (Organization and use of a central special reference collection); materialy nauchno-tekhnicheskogo soveshchaniya. Moscow, 1964, 74-85

TOPIC TAGS: automatic data correlation, data processing, data storage, information recording, computer, information processing, library

16

ABSTRACT: The functions and library equipment of this reference and information center are described. Because the work depends on a close cooperation with the scientific technical library, recommendations were made for further improvement of this relationship by a partial mechanization of the procedures through the use of special perforated card-systems (perfo-cards). Cards with marginal perforation which required special hardware in handling were inferior to the visual perfocards manufactured by the computer factories and used without any mechanical equipment. The card systems were classified as thematic- or specialty-registers according to their functions. Visual and marginal perfo-cards were used in both cases. Thematic

Card 1/2

L 30118-65
ACCESSION NR: AT5003806

description cards were written in direct coding for each article in the scientific-technical library (sometimes such cards included the addresses of pertinent industrial organizations). Further improvement in speed and working accuracy was achieved by the introduction of automatic punch-cards processed by 80-column mechanical computers; this system was used for cataloging electrical machinery. The catalog contents were transferred to nonperforated cards size K5; each card was given an order number which was then punched on the corresponding number of the parallel visual perfo-cards (containing descriptions) by a standard 80-column card-punch machine. The visual perfo-cards were written in the same descriptive code developed previously for the marginal card systems. A very practical thematic card file of purely bibliographic nature was introduced. A simple information language containing 57 descriptors was developed for the marginal card system; an annotated bibliography with the descriptions arranged in the numerical order was the information source for the visual card systems. Searching procedure with both systems was simple and required little time. Orig. art. has: 6 figures.

ASSOCIATION: Vsesoyuznyy institut nauchnoy i tekhnicheskoy informatsii (All-Union Institute of Scientific and Technical Information)

SUBMITTED: 23Sep64 ENCL: 00 SUB CODE: DP

NO REF SOV: 000 OTHER: 000

Card 2/2

DOTSENKO, K.D., mashinist ekskavatora; TIMASHKOV, M.V.; GRODETSKIY, I.A.; OLFER'YEV, M.A.; IVANOV, M.N., inzhener, redaktor.

[Highly productive work on a dragline excavator] Opyt vysokoproizvoditel'noi raboty na ekskavatore-draglaine. Moskva, Gos. transp. zhel-dor. izd-vo, 1953. 28 p. (MLRA 7:4)

(Excavating machinery)

GRODETSKIY, I.A.; KARAMYSHEV, I.A., inzhener, redaktor; KHITROV, P.A., tekhnicheskiy redaktor.

[Work scheduling in mechanized earthwork] Dispetcherizatsiia mekhanizirovannykh zemlianykh rabot. Moskva, Gos. transp.zhel-dor. izd-vo, 1953. 109 p. [Microfilm] (MLRA 7:11)
(Earthwork)

GRODETSKIY, I.A.

Experience in building earthen roadbeds for narrow-gauge railroads. Transp.stroi.5 no.8:3-6 O '55. (MLRA 9:1)

1.Rukoveditel' gruppy proyektnoge-konstruktorskoge byura Glavstroymekhanizatsii.

(Railroads--Earthwork)

GOTSDINER, S.O.; GRODETSKIY, I.A.; KATTSEN, I.Ye.; KRASNYANSKIY, A.I.; POSEL'SKIY, P.P.; SOROKIN, N.N., inzhener, redaktor; TIKHONEVICH, B.Z., inzhener, redaktor; KHITROV, P.A., tekhnicheskiy redaktor

[Advanced engineering methods in excavation work in connection with railroad construction] Peredovaia tekhnologiia proizvodstva zemlianykh rabot pri stroitel'stve zheleznykh dorog. Moskva, Gos. transp.zhel-dor. izd-vo, 1956. 150 p. (MLRA 9:10)

(Excavating machinery)
(Railroads--Earthwork)

GRODETSKIY, I.A., inzh.

Disseminating experience of efficient workers. Transp. stroi. 7 no.12: 29- 30- D '57. (MIRA 11:2)

(Railroad engineering)

MYAKINNIKOV, N.A., kand.tekhn.nauk; KURDIN, G.K., inzh.; GRODETSKIY, I.A., inzh.

Device for measuring slopes. Transp.stroi. 8 no.4:30-31 Ap '58. (MIRA 12:12)

(Level(Tool))

M-2

CZECHOSLOVAKIA/Cultivated Plants - Grains.

Abs Jour : Ref Zhur - Biol., No 7, 1958, 29675

Author : Grodetskiy, V.
Inst : -
Title : An Evaluation of the Results of Wheat Variety Testing in 1955-1956.

Orig Pub : Za vysokou urodu, 1957, 5, No 15, 351-353

Abstract : No abstract.

Card 1/1

GRODETSKIY, Yu.S.

125-58-4-14/15

AUTHORS: Lashkevich, R.I., Candidate of Technical Sciences; Grodetskiy, Yu.S., Engineer, Shirokovskiy, K.M., Engineer

TITLE: Guiding Device for Automatic Welding (Sledyashsheye ustroystvo dlya avtomaticheskoy svarki)

PERIODICAL: Avtomaticheskaya Svarka, 1958, Nr 4, pp 92-94 (USSR)

ABSTRACT: The described device, developed at the Electric Welding Institute imeni Paton, automatically directs electrodes in difficult-to-reach spots, in particular in welding inside seams on large-diameter gas line pipes. Prior to welding, a "bearing line" must be traced on one of the pipe blank edges with the use of a special floating cutter head (Figure 1) which is attached to the end of the top crosshead beam on an edge-finishing mill. The electrical system of the device (shown in Figure 2), comprises a guide block consisting of a bridge with two semi-conductor photo-resistances and an optical system, a phase-sensitive amplifier, an electric machine amplifier, and an electric mechanism switching-in the motor and the reductor. The guide block is mounted on the welding nozzle or on the welding head housing. The image of the "bearing

Card 1/2

Guiding Device for Automatic Welding 125-58-4-14/15

line" falls on the photo-resistances, and when they are lit equally - the bridge is in balance. Even a slight displacement of electrodes from the center line on the blank causes a displacement of the guide block from the "bearing line", which in turn causes a signal and actuates the machine amplifier. The polarity of the signal determines the rotation direction of the motor and hence a displacement of the electrodes back to coincidence with the center line. It was shown in long tests at the Khartsyzskiy trubnyy zavod (Khartsyzsk Pipe Plant) that the displacement of electrodes from the weld center does not exceed 1 mm to one or the other side. The device is reliable and does not require highly-skilled operators It is recommended for use in the production of pipes.
There is 1 photo and 1 figure.

ASSOCIATION: Institut elektrosvarki imeni Ye.O. Patona AN UkrSSR (Electric Welding Institute imeni Ye.O. Paton of the AS UkrSSR)

SUBMITTED: December 28, 1958

AVAILABLE: Library of Congress

Card 2/2

18(5), 28(1) SOV/125-59-10-4/16

AUTHOR: Paton, B.Ye., Academician, and Grodetskiy, Yu.S., Engineer

TITLE: The Programming of Welding Processes

PERIODICAL: Avtomaticheskaya svarka, 1959, Nr 10, pp 31-38 (USSR)

ABSTRACT: The article is concerned with programming installations for the automatic regulation of fast and prolonged welding operations, and the author divides the operations into 3 groups. The first one is that for fast welding processes, the program of which is illustrated in Fig 1. The program of the voltage may be arrived at simply and accurately by means of the layout given in Fig 2. The power of the resistances r is selected as being less than r_1, r_2, r_3; the voltage in the resistances r is thus $U_I'' = r(i_1 + i_2 + i_3)$ and $U_I'' = r(i_5 + i_6 + i_7)$. In order to synchronize the voltage program with the circuit the switches k_1, k_2, k_3 must be switched off when the current transfer reaches zero, the required voltage being maintained by the connection of the appropriate switch (k_4 in Fig 2). This lay-out allows for a very accurate system, which

Card 1/4

SOV/125-59-10-4/16

The Programming of Welding Processes

is also synchronized with the circuit, and can in addition be used for programming other factors, such as pressure. In this case peak-transformers (Fig 2) or rapid-action electromagnetic relays are inserted in the circuit; the peak-transformers have 2 peak windings, each feeding its own group of tiratron circuits (even and odd). This voltage cycle must be repeated periodically for the programming of roller welding, all the tiratrons being switched off in the same way as above by means of a discharge circuit (Fig 3). Fig 4 contains an oscillogram of the program voltage illustrated in Figs 2 and 3. In the section devoted to welding processes of average duration, the author deals with operations lasting 1-2 secs. These can be carried out in accordance with the aforementioned method, but to avoid an excess of switches, an auxiliary electro-mechanical apparatus is installed, which guarantees the regular discharge of impulses. This consists of a peak-transformer in which voltage peaks are formed at moments of sharp alteration in the magnetic current, caused by the proximity of a

Card 2/4

SOV/125-59-10-4/16

The Programming of Welding Processes

steel disc, which is synchronized with the circuit (illustrated in Fig 5a); the voltage peaks are illustrated in Fig 5b. Since one path of movement for the steel discs is insufficient, several are used, the number of peak-transformers equalling the number of paths. Finally, the programming of prolonged welding processes is dealt with. Here there is no need for synchronization with circuit voltage or for maintaining program voltage during each half-period or period; a programming installation for this kind of welding process must be of constant voltage, alternating at fixed intervals, it must be simple to use and must have no moving contacts. Photoelectric installations are the best for the purpose, and the program can be carried out as a black-and-white film (Fig 6a). Changes in the proportions of black and white are reflected in the amount of photoresistance and Fig 6b shows the dependence of the voltage at the bridge exit on the amount of light. This system can be used for several programs by means of a revolving

Card 3/4

SOV/125-59-10-4/16

The Programming of Welding Processes

drum and the appropriate films; its advantages are its simplicity, its diversity of application and its clarity, while it is marred by being somewhat inaccurate. The inductive feeder shown in Fig 7 is sometimes used instead, enabling the sensitivity to be raised and zero discharge voltage to be attained. There are 7 diagrams and 2 Soviet references.

ASSOCIATION: Ordena trudovogo krasnogo znameni institut elektrosvarki imeni Ye.O. Patona AN USSR (Order of the Red Banner of Labor Institute of Electric Welding imeni Ye.O. Paton AS UkrSSR); AS USSR (Paton)

SUBMITTED: August 4, 1959.

Card 4/4

22946
S/125/61/000/007/002/013
D040/D112

1.2300

AUTHORS: Paton, B.Ye., Gavrish, V.S., Grodetskiy, Yu.S.

TITLE: Universal Welding Programmer

PERIODICAL: Avtomaticheskaya svarka, no.7, 1961, 15-20

TEXT: The Ordena Trudovogo Krasnogo Znameni Institut elektrosvarki im. Ye.O. Patona AN SSSR (Electric Welding Institute "Order of the Red Banner of Labor" im. Ye.O.Paton AS UkrSSR) has developed a new universal programming system called УПУ (UPU) for resistance welding machines. It eliminates the deficiencies of previously described programmers (Ref.2: B.Ye. Paton, Yu.S.Grodetskiy, "Avtom.svarka", no.10, 1959; Ref.3: V.N.Nikulin, V.I.Skurikhin, "Avtom.svarka", no.10, 1960) that were complicated and had no dependable program carrier. The UPU is a discrete system with a numerical binary code by which any number can be presented as a sum

$$N = \sum_{k=0}^{k=n-1} a_k 2^k,$$

where a_k can only have one of two meanings - 0 or 1. An example: the

Card 1/6

22946
S/125/61/000/007/002/013
D040/D112

Universal Welding Programmer

number $53 = 1 \cdot 2^5 + 1 \cdot 2^4 + 0 \cdot 2^3 + 1 \cdot 2^2 + 0 \cdot 2^1 + 1 \cdot 2^0 = 110\ 101$, i.e. 53 will be represented by six digits on the program carrier. The system is illustrated in a block diagram (Fig.1) where the program carrier in the input bloc (ВП) is a punched disc (Fig.2,b). It is driven by a synchronous motor, and the program can easily be synchronised with the network voltage and repeated. The photoelectric information reader unit (СП, Fig.1) cannot cause disc wear. The third link of the UPU is the decoder (Д). The reading head is placed above the rotating punched disc and consists of a set of air-cooled germanium phototriodes, 6.3 v, 0.28 amp light bulbs, and an orifice plate with slits. The perforations in the disc give the program of welding current and pressure; 4-5 rows of perforations are sufficient for current, 1-2 for pressure, and one for start synchronization. Programs can be prepared at industrial plants without complex computing devices. Tables must be prepared by production engineers, and then the discs punched according to the table data in a puncher consisting of two discs with drilled holes. A black paper sheet is put between the discs and punched. The presence of a hole in the carrier means 1, the absence of a hole - 0. Light passing through perforations and falling on a phototriode produces voltage pulses in an electrical circuit. These pulses are fed through an amplifier unit into

Card 2/6

the decoder, at whose output a stepped program voltage (Fig.3) is obtained. This voltage can easily be converted by phase shifters into the phase of the ignition angle of thyratrons in the power circuit. The decoder (Fig.4) consists of a row of trigger cells (T_1, T_2, ...,T_m) with thyratrons passing a current flow $I_{o,fl}=1 \cdot 2^n$ current through the resistor R_m. The exponent n is different for each cell and is determined by the formula

$$n = k \frac{U_n}{R_m + R_{thyr}},$$

where U_n is the trigger feed voltage, R_m - resistance in the cathode, R_{thyr} - the thyratron resistance, k - the proportionality factor. The exponent n can be chosen by selecting resistances R_m to pass current I_{fl}, $2I_{fl}$, $4I_{fl}$, $8I_{fl}$, etc. The current through the common resistor (R_o) will be:

22946

S/125/61/000/007/002/013
D040/D112

Universal Welding Programmer

This resistor adds the trigger cells current, and the voltage drop in it (stepped) is the output of the whole programmer. The punched disc is driven by a synchronous motor, and the phototriode pulses and the output voltage are synchronized accurately with the network, which is important for operation with ignitron interrupters. Multiple repetition of the program for seam welding is possible. A special trigger cell is controlled by a voltage pulse from the start holes on the punched disc and makes it possible to start welding only at a definite moment, regardless of when the operator steps on the control pedal. Pressure on the electrodes in spot welding can be varied by a program recorded on the same program disc. The described universal programmer can work with thyratrons in trigger cells, or with transistors. Conclusions: (1) The developed programmer permits any desired variations of current and pressure; (2) The computing techniques ensure high interference-killing capacity and dependability of the system; (3) Punched program discs may be produced at a center and supplied to the plant; this will result in strict technological discipline, higher precision and stability of program

Card 4/6

22946

S/125/61/000/007/002/013
D040/D112

Universal Welding Programmer ....

repetitions. There are 6 figures and 3 Soviet-bloc references.

ASSOCIATION: Ordena Trudovogo Krasnogo Znameni Institut elektrosvarki im. Ye.O.Patona AN USSR (Electric Welding Institute "Order of the Red Banner of Labor" im. Ye.O.Paton AS UkrSSR)

SUBMITTED: March 13, 1961

X

Card 5/6

22946
S/125/61/000/007/002/013
D040/D112

Universal Welding Programmer

Fig.1. Block diagram of the universal programmer
BП - program input unit; CП - reader unit; Д - decoder.

Fig.3. - Graph $U_{fl} = f(t)$

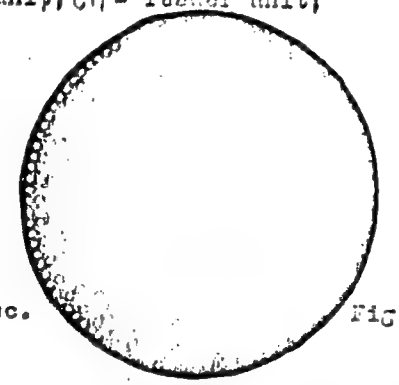

Fig.2,b. Punched disc.

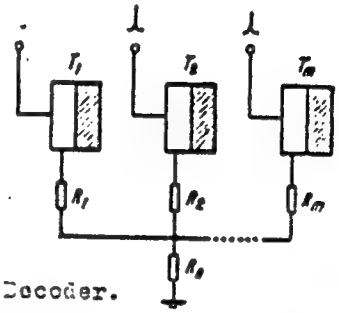

Fig.4. - Decoder.

Card 6/6

S/125/62/000/005/001/010
D040/D113

AUTHORS: Paton, B.Ye., Gavrish, V.S., and Grodetskiy, Yu.S.

TITLE: Decatron programmer

PERIODICAL: Avtomaticheskaya svarka, no. 5, 1962, 1-4

TEXT: The programming system for spot and seam resistance welding is an improved version of a universal programmer, previously described by the authors ("Avtomaticheskaya svarka", no. 7, 1961), which had a punched disc, mechanical elements for inserting the program, too many electron tubes and thyratrons, and did not permit immediate repetition of the program. The program carrier in the new system is an immobile punched card, the reader arrangement a set of contacts connecting through the card holes. A -101 (A-101) commutating decatrons accurately scan the program in step with the supply network voltage. The maximum cycle time depends on the number of decatrons used. The decoder comprises a series of transistorized amplifier-limiters, the current from which passes one resistor; the output voltage from the resistor controls the phase shifter. The

Card 1/2

Decatron programmer

S/125/62/000/005/001/010
D040/D113

start circuit includes blockings and auxiliary units, and is switchable for spot or seam welding. Programming calculations using tables ("Avtomaticheskaya svarka", no. 7, 1961) are not time-consuming and require no computers. A detailed description of the decatron programmer design and operation principles is given. There are 4 figures.

ASSOCIATION: Ordena Trudovogo Krasnogo Znameni Institut elektrosvarki im. Ye.O. Patona AN USSR (Electric Welding Institute "Order of the Red Banner of Labor" im. Ye.O. Paton, AS UkrSSR)

SUBMITTED: January 19, 1962

Card 2/2

L 12336-63 EWP(k)/EWP(q)/EWT(m)/BDS AFFTC/ASD Pf-4 JD/HM
ACCESSION NR: AP3000138 S/0125/63/000/005/0007/0010

62
61

AUTHOR: Paton, B. Ye.; Gavrish, V. S.; Grodetskiy, Yu. S.

TITLE: Electronic (inertialess) schemes for automatic control of resistance-welding processes [Report at the Conference on Automatic Welding Control, Kiev, 25 December 1962]

SOURCE: Avtomaticheskaya svarka, no. 5, 1963, 7-10

TOPIC TAGS: electronic welding controller, resistance welding

ABSTRACT: Some well-known ways for attaining a higher speed of welding control are considered. A new welding controller designed on the principle of quenching the ignitrons permits practically inertialess controlling of the welding process. The quenching occurs at the moment when the welding current (or voltage) is equal to the set current (or voltage). The controller is suitable for applications (e.g., radio-tube industry) where the welding-current duration is 0.02-0.01 sec. The controller block diagram is shown in Fig. 2 (see Enclosure 1). With the controller on and a supply voltage of 190 v, the strength of test-welded specimens was 3-5 per cent lower than that at the rated 220 v. Other things being equal, with the controller off, the strength reduction was 30-40 per cent. Orig. art. has: 1 formula and 4 figures.

Card 1/3

Inst. of Electric Welding

PATON, B.Ye.; GAVRICH, V.S.; GRODETSKIY, Yu.S.

Inertialess diagrams for the automatic control of resistance welding processes. Avtom.svar. 16 no.5:7-10 My '63. (MIRA 16:11)

1. Institut elektrosvarki imeni Ye.O.Patona AN UkrSSR.

L 09430-67 EWT(d)/EWT(m)/EWP(v)/EWP(t)/ETI/EWP(k)/EWP(h)/EWP(1) JD/IM

ACC NR: AP6032407 / SOURCE CODE: UR/0413/66/000/017/0049/0050

INVENTOR: Lebedev, V. K.; Potap'yevskiy, A. G.; Podola, N. V.; Sheyko, P. P.; Deyneko, M. P.; Grodetskiy, Yu. S.

ORG: none

TITLE: Rectifying device for pulsation arc welding. Class 21, No. 185425 [announced by Institute of Electrical Welding im. Ye. O. Paton (Institut elektrosvarki)]

SOURCE: Izobreteniya, promyshlennyye obraztsy, tovarnyye znaki, no. 17, 1966, 49-50

TOPIC TAGS: arc welding, pulse welding, consumable electrode welding, welding electrode, pulse shaper, transformer, electric capacitor, resistor, welding rectifier, rectifier

ABSTRACT: An Author Certificate has been issued describing a rectifying device for consumable-electrode pulsation welding, containing a rectifier with a choke foil in the rectified current circuit connected in parallel to the rectifying pulse-shaping unit, powered from the power supply system through a transformer and

Card 1/3 UDC: 621.314.632:621.791.75